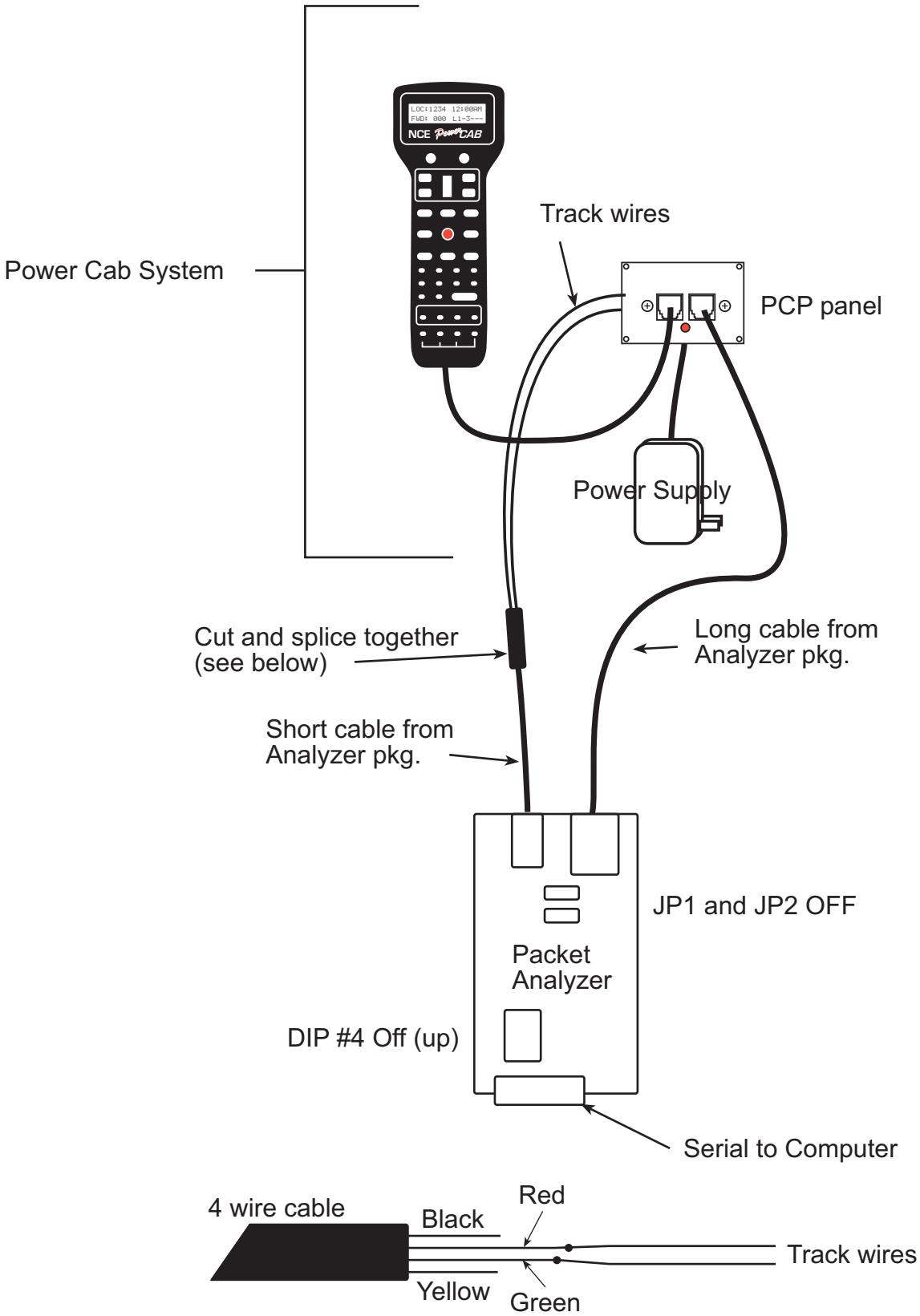
Power Cab System
Track wires
PCP panel
Power Supply
Cut and splice together
(see below)
Long cable from
Analyzer pkg.
Short cable from
Analyzer pkg.
JP1 and JP2 OFF
Packet
Analyzer
DIP #4 Off (up)
Serial to Computer
4 wire cable
Black
Red
Track wires
Yellow
Green