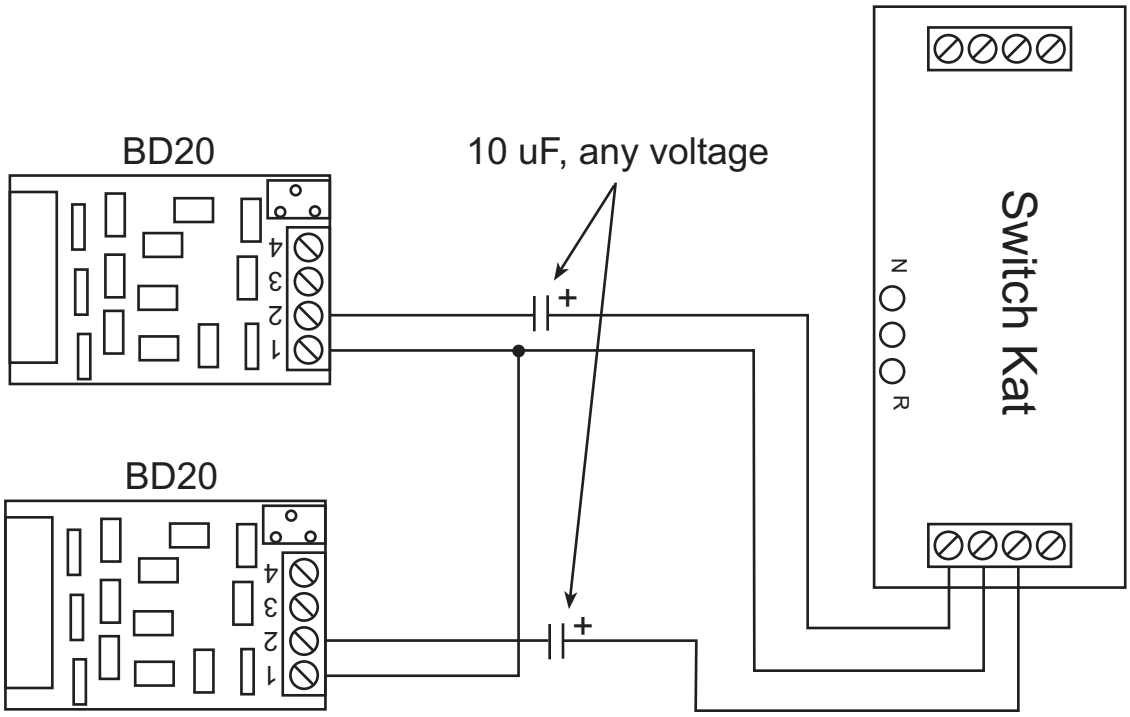
Switch Kat
N
R
10 uF, any voltage
+
+
BD20
1
2
3
4
BD20
1
2
3
4