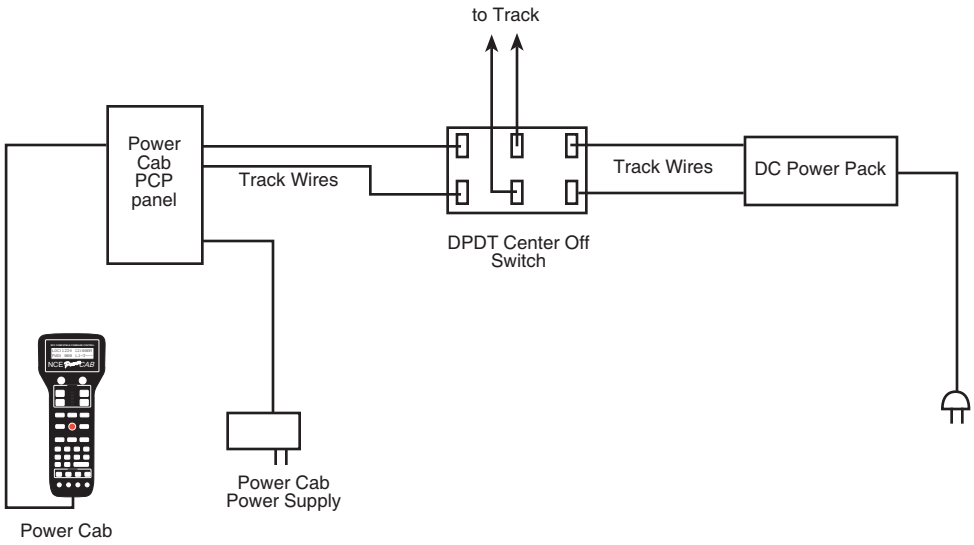
to Track
Power Cab PCP panel
Track Wires
Track Wires
DC Power Pack
DPDT Center Off Switch
Power Cab Power Supply
Power Cab